P/N C7137

COLLECTORS NO. 40037

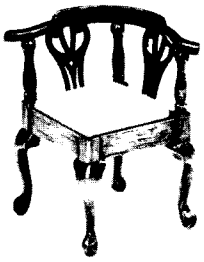

Chippendale Corner Chair

Circa 1750-1780

The corner chair quite obviously derives its name from its shape which allows it to be placed in a room corner and yet allows a person to be seated facing in any desired direction. This flexibility also led to it often being called a "roundabout chair."
Its use is not strictly relegated to filling a room corner, however, since it was also used as an occasional chair or a desk chair.
The corner chair was a favorite with the cabinet maker since it gave him an opportunity to demonstrate his art. Unlike an ordinary side chair duplicates of the same design were seldom necessary allowing him a wide design latitude.
The dual splats, the cabriole legs, and the flowing arms and their supports gave the cabinet maker a chance to show off his carving and finishing skill.
The Chippendale and Queen Anne versions of the corner chair were often very similar in design, but the Queen Anne versions that used four cabriole legs usually had turned cross spreaders connecting the legs.
Chippendale was almost exclusively of mahogany and the cushion was most often covered in damask.

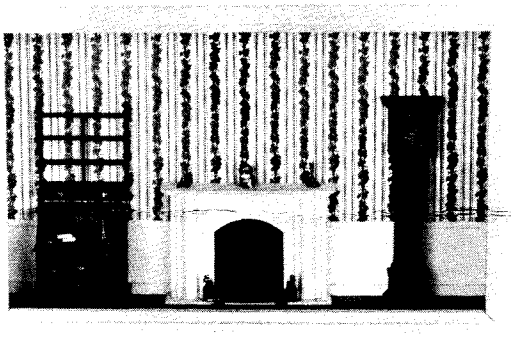

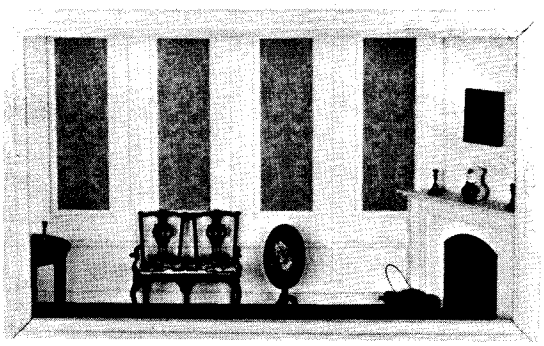

ASSEMBLY AND FINISHING INSTRUCTIONS

THE HOUSE OF MINIATURES X-ACTO COLLECTORS SERIES ™

AUTHENTIC REPRODUCTIONS IN MINIATURE

The X-ACTO® House of Miniatures Collectors Series of furniture and accessories have all been carefully researched by specialists through major museum and library collections to assure the highest quality of authenticity in reproduction. Details are extraordinarily accurate to satisfy the most discriminating miniaturist.

Every item in the line is an authentic reproduction in miniature of regular-size furniture created by master craftsmen during the Colonial period, precision scaled, one inch to one foot.

All wood parts are machined to assure accurate and precise acceptance of each piece by another.

The rooms illustrated have been completed using standard X-ACTO® HOUSE OF MINIATURES products. All individual components are available.

For a complete catalog of the X-ACTO® HOUSE OF MINIATURES furniture line and accessories, write to:

X-ACTO / THE HOUSE OF MINIATURES
Dept. KIT 45-35 Van Dam Street, Long Island City, New York 11101.

Please include $2.00 for postage and handling.

X-ACTO®

© X-ACTO, a subsidiary of Hunt Mfg. Co., Philadelphia, Pa. – 1978

INTRODUCTION

BEFORE STARTING

Identify and account for each part by placing it on the Layout Sheet (make sure the correct layout sheet is used when working on multi-kit Instruction Sheets). Should any parts be missing, send a post card to:

X-ACTO/The House of Miniatures
45-35 Van Dam Street
Long Island City, N.Y. 11101

Please print Name, Address, Part Number (Number from Layout Sheet) and Kit Name and Number on card when ordering.

SANDING

NOTE: When using sandpaper, remember that the higher the grit number, the finer the finish.

A. One sanding method that has proved successful is the use of a sanding platform. Tape a sheet of sandpaper of the proper grit size to a hard flat surface such as a table top or wood block. Press down lightly and move the piece to be sanded in the same direction as the wood grain until the surface is smooth. Take care not to round any edges or corners of the pieces.

B. Before assembly, sand all the outer surfaces of individual parts with 220 grit sandpaper, or finer. Finish sanding with 280 grit sandpaper or finer.

PRE-ASSEMBLY

A. After sanding, check the proper location and fit of each part by assembling parts loosely, without gluing. Use the DETAIL VIEWS as a guide.

B. All parts for X-ACTO kits are made on precision milling machines. When adjustments are required, sand to fit.

TOOLS AND MATERIALS

A. The following tools will be helpful in constructing this kit:

1. Knife, X-ACTO No. 1 with Blade, X-ACTO No. 11
2. Tweezer, X-ACTO No. 7336
3. Two-inch Sander, X-ACTO No.7042
4. Large Clamp, X-ACTO No.7004
5. Small Clamp, X-ACTO No.7003
6. X-ACTO Professional Finishing Kit (or equivalent, see note)

B. The following materials will be needed to construct this kit:

1. X-ACTO Tinted Glue (see note)
2. Waxed paper
3. Sandpaper - 220 and 400 grit
4. Steel Wool - Grade 0000
5. White glue (or equivalent)
6. Small Artist's Brush

NOTE: The X-ACTO tinted glue is matched to the finish used in the Professional Finishing kit. This will produce the authentic finish of the period in which the original Furniture was produced. When not using X-Acto finishing kit follow Mfg Specs.

GLUING

A. Glue should be applied in small amounts to surface being joined. When gluing dado joints apply glue to dado only. On end cuts, it may be necessary to apply a second coat of glue before joining the parts.

B. To ensure a tight fit, squeeze excess glue out of the joints. Hold glued parts together with clamps, rubber bands or weights on the parts.

C. Wipe off excess glue promptly.

D. Be sure a glued assembly has dried thoroughly before adding parts.

Final Finishing for X-ACTO Professional Finishing Kit

The following process is the same method professional furniture makers use. The end result is what is important—there are easier methods, but none that will give quality results that this process will.

NOTE: READ EACH STEP THOROUGHLY BEFORE PROCEEDING

A. Final Sanding. Lightly dry sand with (280) grit, garnet paper or finer, sanding with the grain. Your surface should, when finished, be very smooth.

B. Seal End and Edge Grains. Using the **Clear Finish/Sealer** as a sealer, apply a coat to all end grains with a small brush. Do NOT allow sealer to touch other surfaces.

DO NOT LOAD BRUSH WITH SEALER

Allow Drying Time - 12 Hours or more

C. Base Stain. Using the BASE STAIN, which is an oil base stain, apply a coat over the entire wood surface using a brush or cloth. **Immediately Wipe Off** all stain leaving an even color over the entire wood surface. This base color will be seen in the highlighted area after the glaze stain has been applied.

NOTE: When finishing drawers - stain the face piece of the drawer only. This will add authenticity to your piece as regular-size furniture never has stained drawer interiors.

Allow Drying Time - 12-18 Hours

D. Sealing in Base Stain. In order to seal the base stain from subsequent coats that have the same solvent as the base stain, a sealer coat must be applied. Using the **Clear Finish/Sealer** apply a coat over the entire piece - using a brush or sprayer. Whichever method is used, be sure there are no drop marks. This should merely be a thin coat.

Allow Drying Time - 12 Hours or more

E. Glaze Stain. Apply the **Glaze Stain** with a brush, or rag, to the entire surface of your piece of furniture.

At this point you have a choice of achieving two types of finishes. Wiping the glaze stain off evenly until only a thin layer of color remains will produce an attractive finish with the tone you have selected.

Highlighting is a technique of light and dark areas that is accomplished by **Toning** or **Rubbing off the Glaze Stain** in areas exposing the base stain. With a soft cloth start blending tones of base stain and glaze stain by rubbing off the glaze stain starting from the middle of the piece and working outwards. The middle should be light with darker tones toward the outside edge.

THERE SHOULD NEVER BE A SHARP LINE OF DARK TO LIGHT COLOR - BUT RATHER A SMOOTH BLENDING EFFECT.

NOTE: If you are not satisfied with your first attempt in Highlighting. . .merely wipe off the Glaze Stain from entire piece.

Allow Drying Time - 24 Hours

F. Final Finish or Top Coat. After the Glaze Stain has dried 24 hours, thoroughly wipe, BRISKLY, BUT LIGHTLY, the entire piece with a clean cloth.

Using the **Clear Finish/Sealer** apply an even coat over the entire surface of your piece of furniture with a soft brush, or sprayer.

Allow Drying Time - 12 Hours or more between each coat

Two or more coats of **Clear Finish** should be applied with 12 hours drying time between coats. . .after at least two coats have been applied a smoother finish may be attained by lightly buffing with No. 0000 steel wool. If additional coats of finish are applied, lightly buff between coats with No. 0000 steel wool.

NOTE: After each steel wool rubbing, make sure all steel wool "dust" is thoroughly removed.

(These instructions are for the Mahogany (P/N 43804), Walnut (P/N 43802), and Colonial (P/N 43803) Finishing Kits).

Tidewater Collection of Miniature Furniture / Accessories

Scale 1" to 1'

Collectors No. 40032
CHIPPENDALE
HANGING SHELF
Circa 1760
When finished, measures 3-7/16" high x 3" wide x 11/16" deep

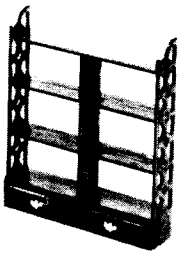

Collectors No. 40027
CABRIOLE LEG
CHIPPENDALE ARM
CHAIR (set of 2) *Circa 1760*
When finished, measures 3-3/16" high x 2-3/8" wide x 1-7/8" deep.

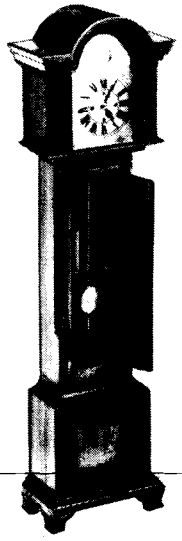

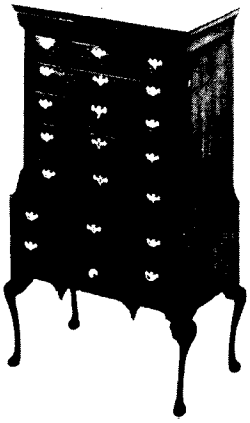

Collectors No. 40035
HOODED CRADLE
Circa 1750
When finished, measures 2-1/8" high x 2-1/8" wide x 2-7/8" deep.

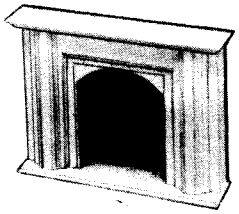

No. 41220
JAMES RIVER FIREPLACE
Circa mid-1700's
Measures 4" tall x 5½" wide x 1¼" deep when finished.

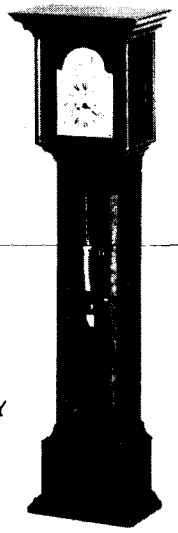

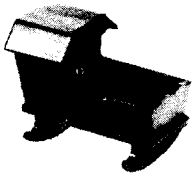

Collectors No. 40018
WILLIAM AND MARY
TALL CASE CLOCK
Circa early 1700's
Measures 7¼" tall when finished.

Collectors No. 40046
SIMON WILLARD
TALL CASE CLOCK
Circa 1790
Measures 7 1/4" tall when finished.

Collectors No. 40022
CHIPPENDALE
STRAIGHT-TOP
HIGHBOY *Circa 1725*
When finished, measures 6-1/2" high x 3-1/2" wide x 2" deep.

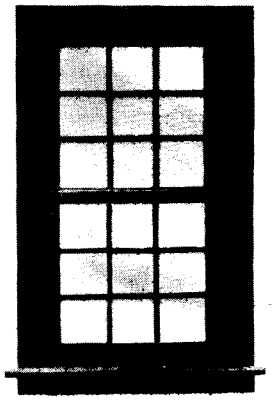

No. 41210 WINDOW
This all wood window kit comes pre-assembled. Windows work completely. Size of opening 2-15/16" wide x 5" tall.

No. 41205 VIGNETTE BOX DISPLAY BOX KIT
Shipped knocked down. Constructed of multi-ply plywood. Complete with decorative frame and nails for assembly. Approximate dimensions: 17½" long x 11½" wide x 4¾" deep. Scale proportions (1" to 1').

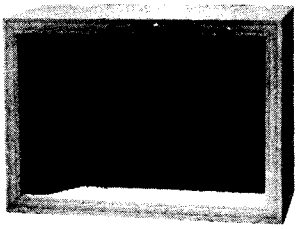

No. 43911 DELUXE
MINIATURIST'S
TOOL SET
Packaged in a handsome wooden chest are the essential tools for the construction of miniature furniture, shadow boxes, vignette boxes, doll houses, etc. Includes complete 1977 catalog of the X-ACTO House of Miniatures.

FINISHES
These finishing kits contain the highest quality materials available for finishing miniature furniture.
Each kit contains 1 base stain, 1 glaze stain, 1 clear finish/sealer, and 1 brush cleaner.
Available in the following finishes:
No. 43802 Walnut, No. 43803 Colonial, No. 43804 Mahogany.

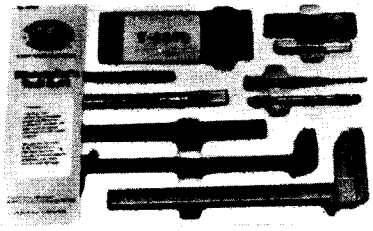

No. 43910
MINIATURISTS TOOL
SET
This 11 piece tool set has been designed to give the Miniature Furniture Enthusiast the basic tools for easier assembly of scale model furniture.

Layout Sheet
KIT 40037

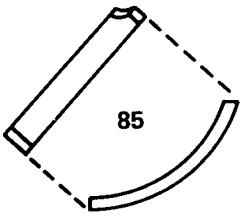

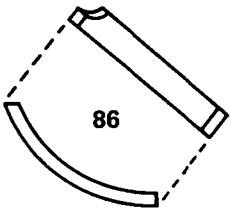

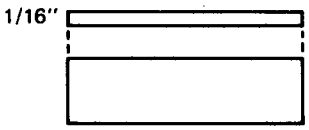

88 (2 REQ'D)

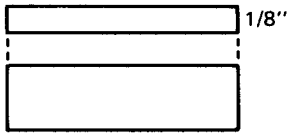

89 (2 REQ'D)

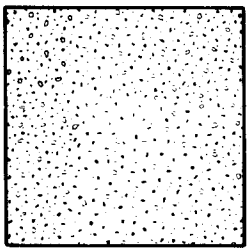

91 (FOAM)

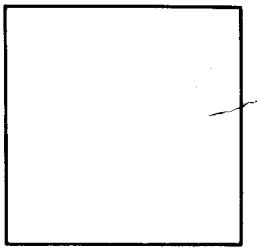

92 (CARDBOARD)

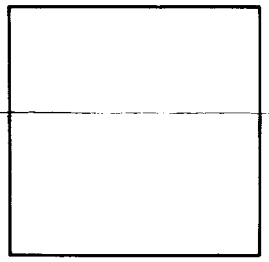

90

96 (3 REQ'D)

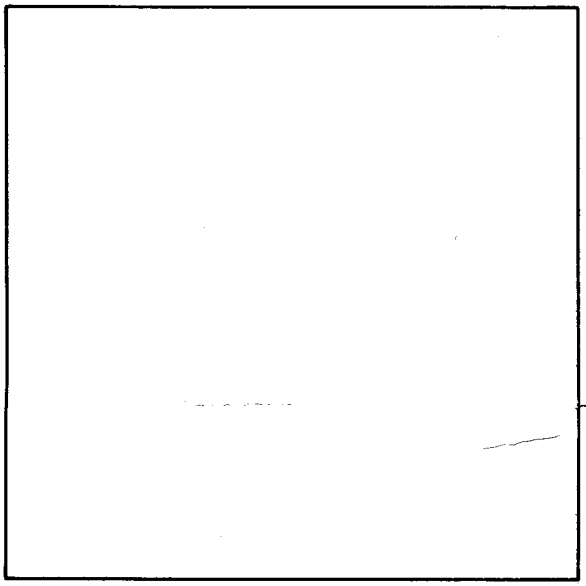

93 (MATERIAL)

6
(4 REQ'D)

97
(3 REQ'D)

95

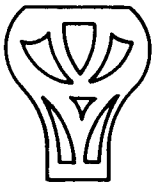

94 (2 REQ'D)

28 (2 REQ'D)

Detail Views

KIT 40037

Step 1

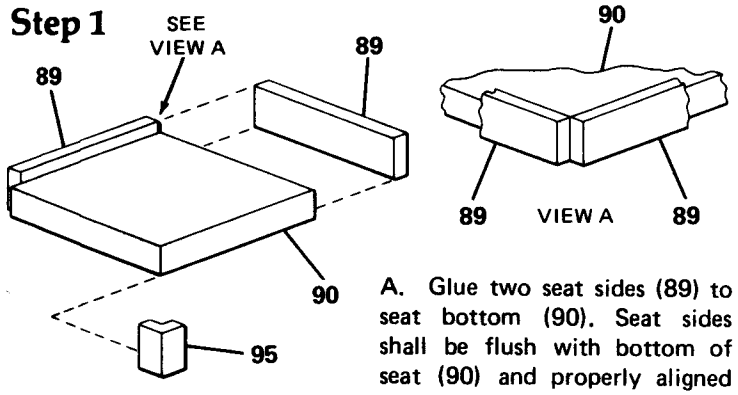

A. Glue two seat sides (89) to seat bottom (90). Seat sides shall be flush with bottom of seat (90) and properly aligned at corners.

NOTE: Place seat bottom (90) on a clean flat surface. Ensure all parts are correctly positioned before glue sets.

B. Glue leg pad (95) to front corner of seat bottom (90). Leg pad shall be flush with bottom of seat (90).

Step 2

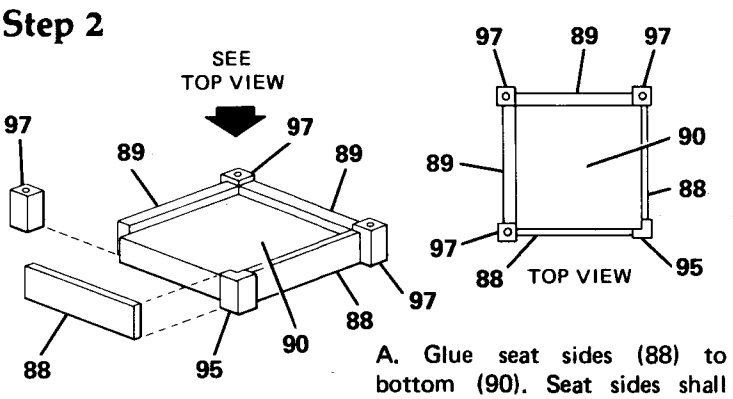

A. Glue seat sides (88) to bottom (90). Seat sides shall be flush with bottom.

NOTE: Before gluing sides (88) in place, check fit. Ensure sides butt against (95) and extend to corner of seat.

B. Glue leg pads (97) to assembly. Ensure holes face up and pads are flush with bottom.

Step 3

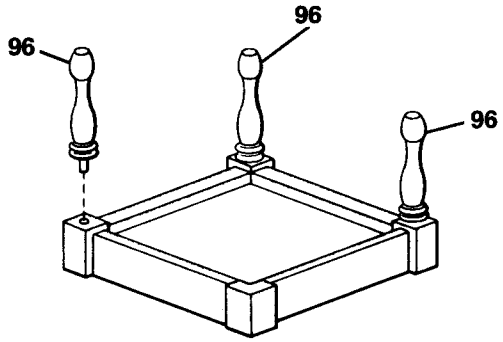

A. Glue three back supports (96) to leg pads (97).

Step 4

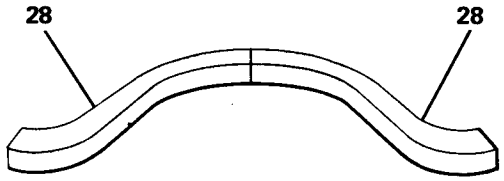

A. Utilizing Alignment Pattern glue arms (28) together.

Step 5

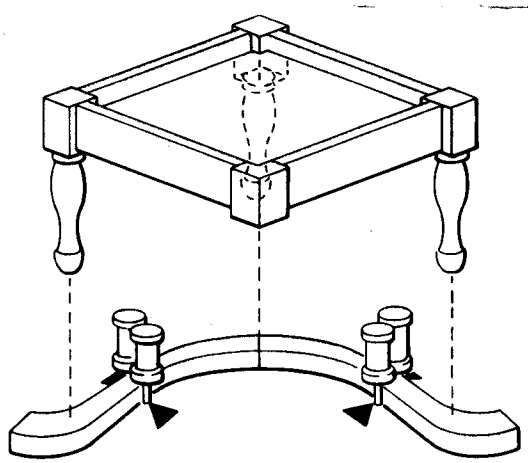

A. With arm assembly still on Alignment Sheet glue back supports to arm assembly aligning center back support with center of arm assembly.

Step 6

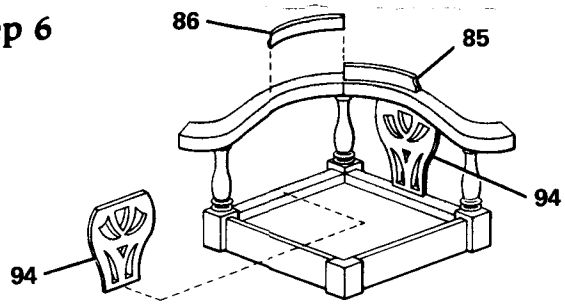

NOTE: Align back (85) and back (86) with center of arm assembly.

A. Glue right and left back (85) and (86) to center of arm assembly.

NOTE: Before gluing splats (94), pre-fit to assembly. Light sanding may be required. Ensure larger opening on splat faces forward.

B. Glue two splats (94) to arm and base assembly.

Detail Views
KIT 40037

Step 7

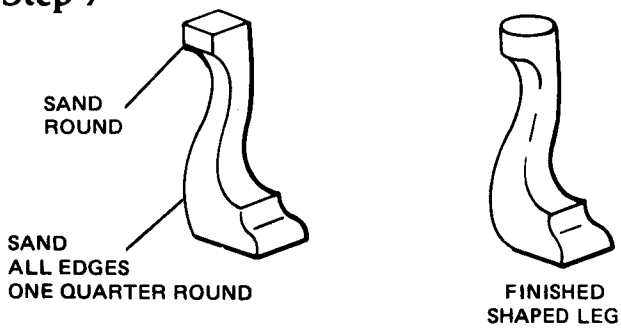

NOTE: Cabriole legs (6) may be shaped prior to assembly.

A. Shape legs by sanding.

B. Sand base of leg until it is round.

Step 8

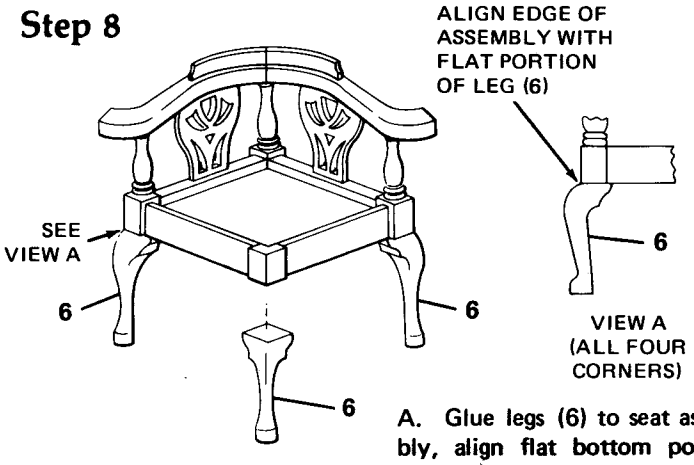

A. Glue legs (6) to seat assembly, **align flat bottom portion** of legs with edge of assembly.

NOTE: Refer to Final Finishing.

Step 9

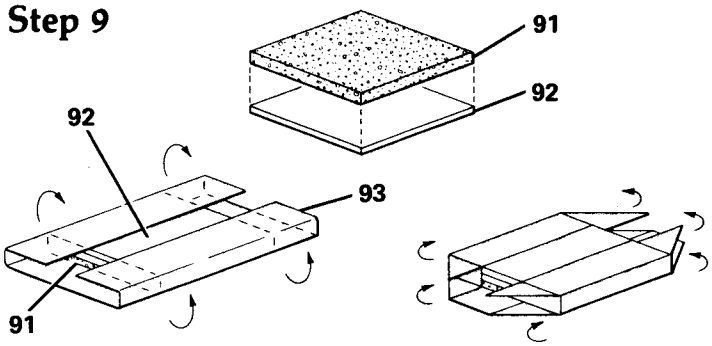

A. Glue cushion (91) to base (92) with white glue.

B. Place cushion (91) down on material (93). Fold material over and glue in place with white glue.

C. Tuck each corner under.

D. Fold front and rear of fabric and glue in place.

Step 10

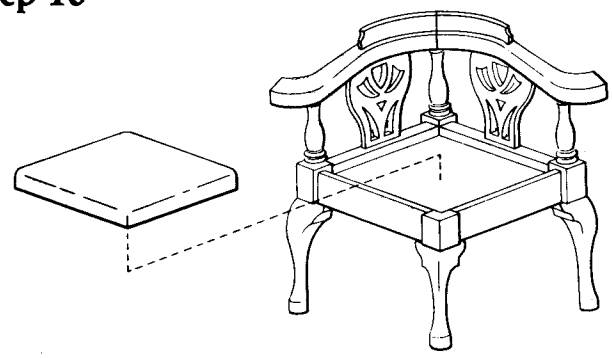

A. After Final Finishing of chair, glue cushion to seat.
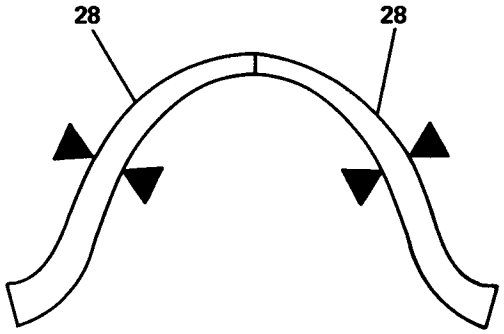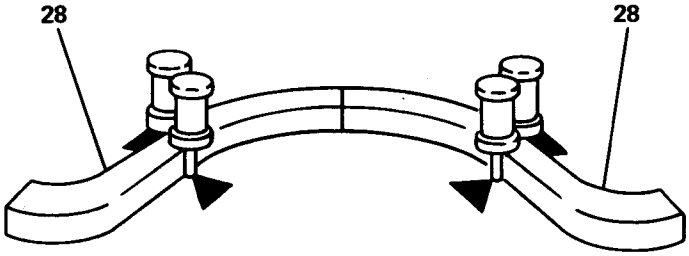
Alignment Patterns