PIN C7162, REV. 1

ASSEMBLY AND FINISHING INSTRUCTIONS

COLLECTORS NO. 40062

Hepplewhite
Cellarette
Circa 1790

The original of this unique piece of furniture was built by an American cabinetmaker sometime in the 1790's. The design is based upon Hepplewhite's distinctive style.
The tapered legs and uncluttered lines are typical and made his work stand out among the ornate curves and carvings of earlier and later periods.
This particular piece of furniture obviously wasn't built for one of our Puritan ancestors. The top section was intended to provide storage for several bottles of spirits and the drawer section allowed the owner to keep his corkscrews, etc. ready for use.
The pull out shelf above the drawer provided a working space for the Colonial host or hostess. Pieces of furniture such as this Cellarette are unique because they were constructed for such a special purpose. They also provide us with a small insight into the life styles of these earlier times.

THE HOUSE OF MINIATURES X-ACTO COLLECTORS SERIES ™

AUTHENTIC REPRODUCTIONS IN MINIATURE

The X-ACTO® House of Miniatures Collectors Series™ of furniture and accessories have all been carefully researched by specialists through major museum and library collections to assure the highest quality of authenticity in reproduction. Details are extraordinarily accurate to satisfy the most discriminating miniaturist.

All wood parts are machined to assure accurate and precise acceptance of each piece by another.

For a complete catalog of the X-ACTO® HOUSE OF MINIATURES furniture line and accessories, write to:

X-ACTO® THE HOUSE OF MINIATURES Dept. KIT
45-35 Van Dam Street
Long Island City,
New York 11101

Please include $2.00 for postage and handling.

INTRODUCTION

BEFORE STARTING

Identify and account for each part by placing it on the Layout Sheet (make sure the correct layout sheet is used when working on multi-kit Instruction Sheets). Should any parts be missing, send a post card to:

X-ACTO/The House of Miniatures
45-35 Van Dam Street
Long Island City, N.Y. 11101

Please print Name, Address, Part Number (Number from Layout Sheet) and Kit Name and Number on card when ordering.

SANDING

Before assembly, sand all the outer surfaces of individual parts with 220 grit sandpaper, or finer, sanded in the same direction as the wood grain until the surface is smooth. Take care not to round any edges or corners of the pieces. Finish sanding with 280 grit sandpaper.

PRE-ASSEMBLY

A. After sanding, check the proper location and fit of each part by assembling parts loosely, without gluing. Use the DETAIL VIEWS as a guide.

B. All parts for X-ACTO kits are made on precision milling machines. When adjustments are required, sand to fit.

TOOLS AND MATERIALS

A. The following tools will be helpful in constructing this kit:

1. Pin Vise X-ACTO No. 7144
2. Two-inch Sander, X-ACTO No. 7042
3. Large Clamp, X-ACTO No. 7004
4. Small Clamp, X-ACTO No. 7003
5. X-ACTO Professional Finishing Kit (or equivalent, see note)

B. The following materials will be needed to construct this kit:

1. X-ACTO Tinted Glue (see note)
2. Sandpaper - 220 and 280 grit
3. White glue (or equivalent)
4. Small Artist's Brush

NOTE: The X-ACTO tinted glue is matched to the finish used in the Professional Finishing Kit. This will produce the authentic finish of the period in which the original Furniture was produced. When not using X-ACTO glue follow manufacturer's directions.

GLUING

A. Glue should be applied in small amounts to surface being joined. When gluing dado joints apply glue to dado only.

B. To ensure a tight fit, squeeze excess glue out of the joints. Hold glued parts together with clamps, rubber bands or weights on the parts.

C. Wipe off excess glue promptly.

D. Be sure a glued assembly has dried thoroughly before adding parts.

FINISHING

The X-ACTO Professional Finishing Kit enables you to finish your furniture by the same process used by the professional furniture maker. The end result is what is important – there are easier methods, but none that will give the quality results that this process will. If you use a finish other than X-ACTO's, refer to the manufacturer's directions.

© X-ACTO, a subsidiary of Hunt Mfg. Co., Philadelphia, Pa. – 1980

Detail Views

KIT 40062

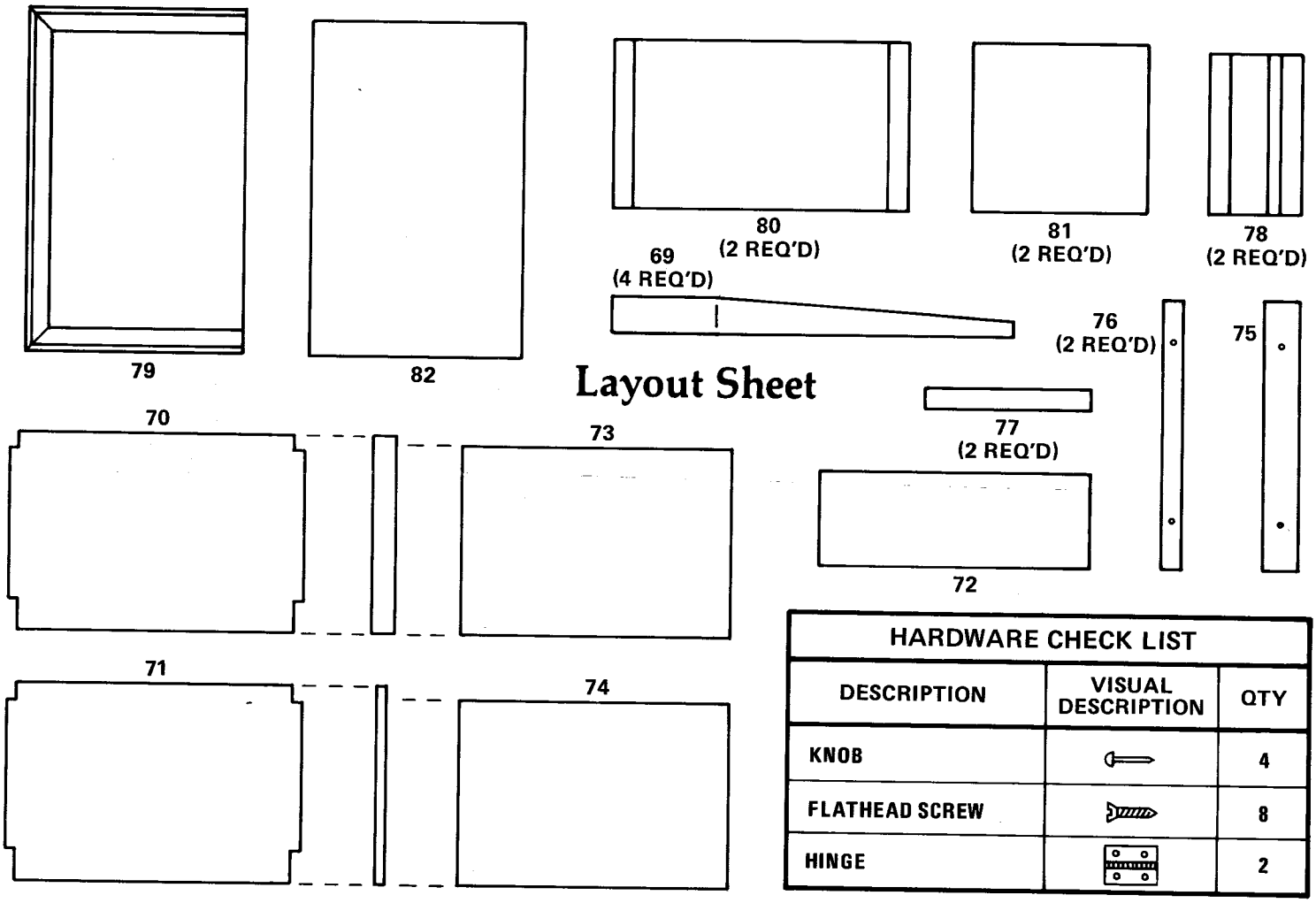

HARDWARE CHECK LIST		
DESCRIPTION	VISUAL DESCRIPTION	QTY
KNOB		4
FLATHEAD SCREW		8
HINGE		2

Step 1

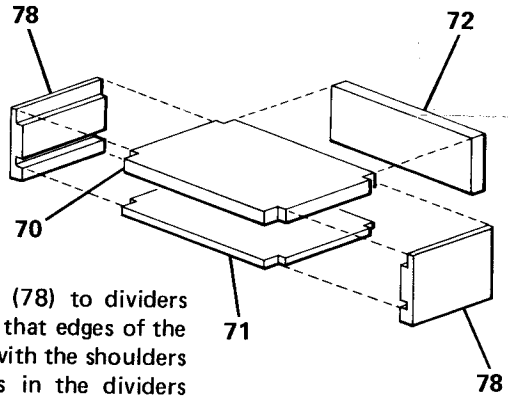

A. Glue sides (78) to dividers (70) & (71) so that edges of the sides are flush with the shoulders of the notches in the dividers (70) & (71).

B. Glue back (72) to the rear of the dividers (70) & (71) (Note, the rear of the dividers has the smallest notches.) Ends should be flush with the edge of the notches.

Step 2

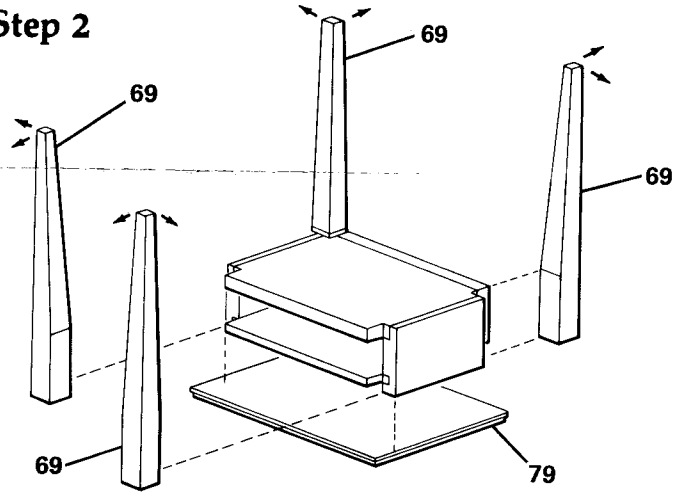

A. Glue legs (69) in place. Arrows at the ends of the legs in the illustration indicate the direction that the flat surfaces of the legs should face.

B. Glue base assembly to base top (79) so that it is centered left to right and the back is flush. Contoured edge of the top should face up.

Detail Views

KIT 40062

Step 3

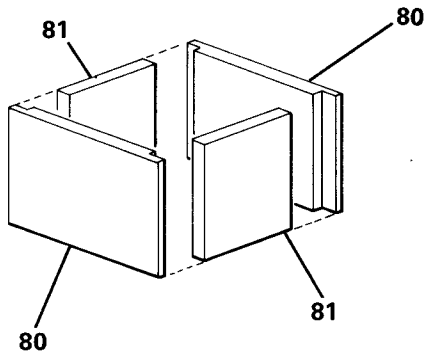

A. Form cabinet assembly by gluing sides (81) to front (80) and back (80). Top and bottom edges should be flush.

Step 4

A. Glue cabinet assembly to base assembly. Backs should be flush and cabinet should be centered on base left to right.

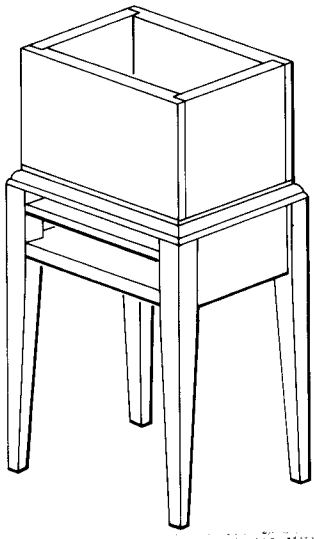

Step 5

A. Position hinges on lid (82) 1/4 inch from edge. Keep hinge pin flush with edge.

B. Using a sharp knife (X-ACTO No. 1 using a No. 11 blade) trace hinge position on lid.

C. Mortice out to approximately 1/32 inch deep for each hinge.

D. Using a pin, make a pilot hole for the screws.

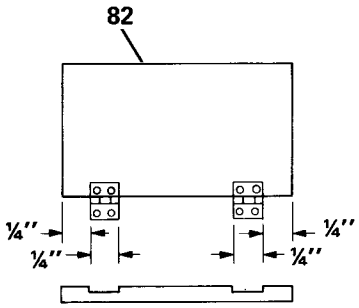

E. Screw hinges to lid.

Step 6

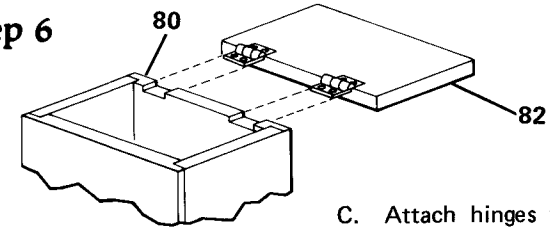

A. Center lid (82) over back (80) and mark position of hinges.

B. Mortice back to accept one half of the closed hinge.

C. Attach hinges to back and check fit. If lid sets too high increase depth of mortice. If lid binds, place a paper shim under hinge leaf.

D. Remove hinges for Final Finishing.

Step 7

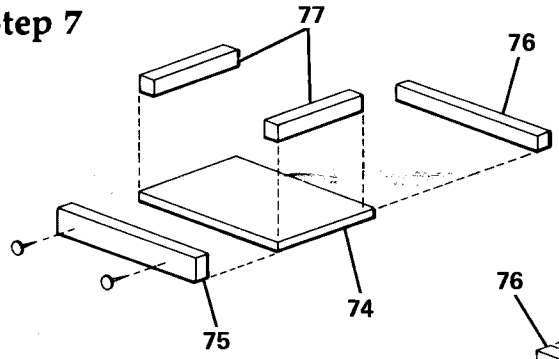

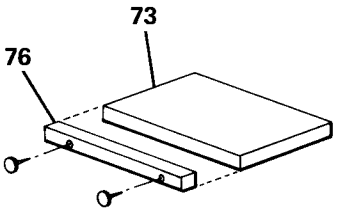

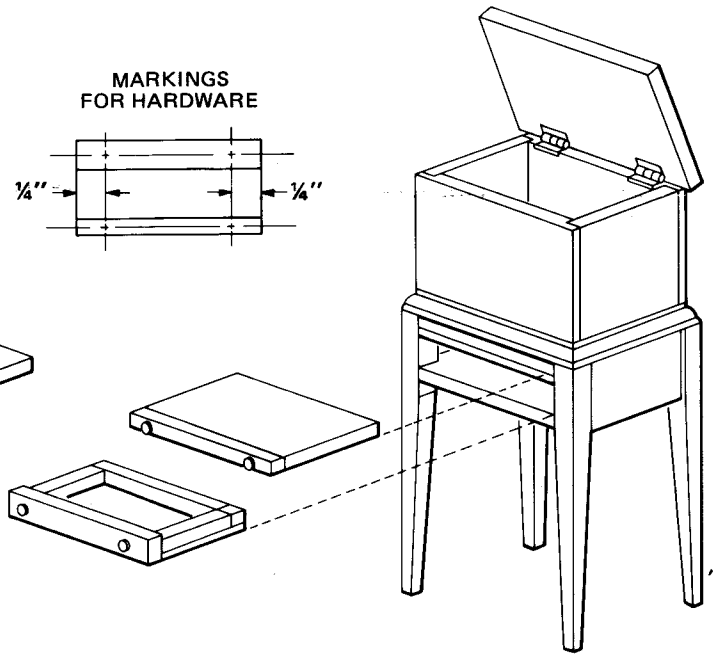

A. Assemble drawer as illustrated. If you do not want to stain inside of drawer, glue it together with white glue and finish front separately prior to assembly.

B. Glue slide front (76) to slide (73).

C. Apply Final Finish to all components at this time. After finishing refer to layout sheet for location of knobs. Drill pilot hole in fronts and install.

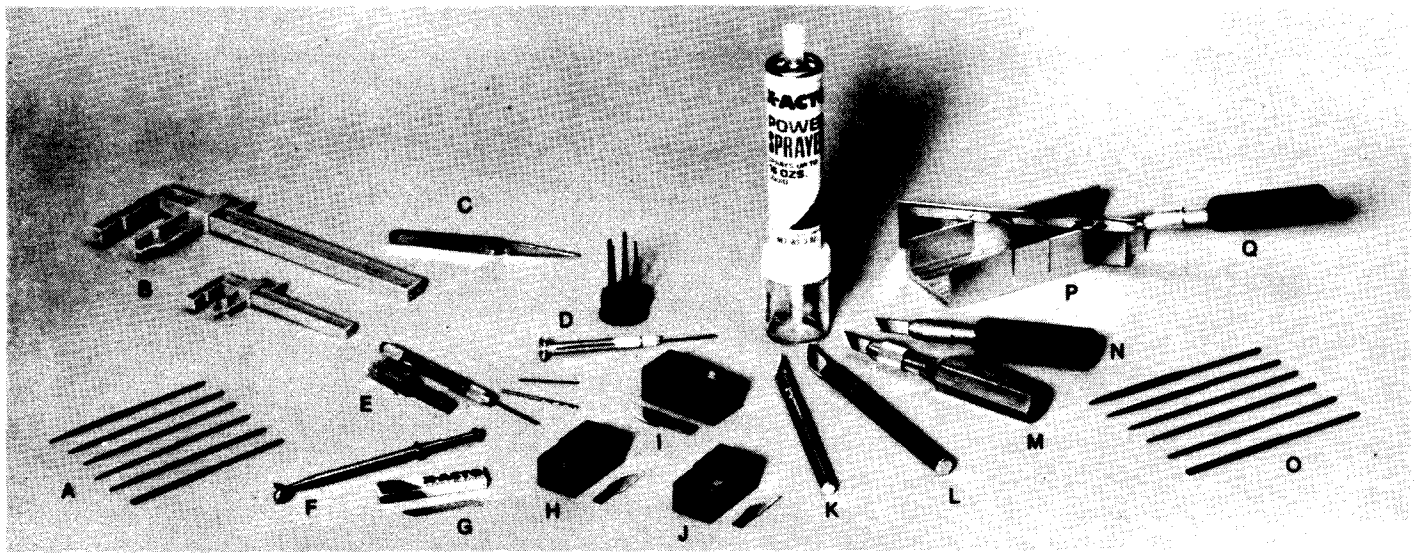

X-ACTO® precision tools make fine miniatures.

A. **MINIATURE FILE SET**
6 miniature needle files. 3⅛" long. For intricate filing.
Vinyl storage pouch. No. 7365

B. **PLASTIC CLAMPS**
Light duty plastic clamps for delicate work. Notched jaw allows grip of round parts. Smooth face prevents damage to workpiece.
Small plastic clamp. 3¼" opening with 1" throat depth.
2 per card: No.7003
Large plastic clamp. 7¼" opening with 2 1/16" throat depth.
2 per card: No. 7004

C. **SELF-CLOSING POINTED TWEEZER**
Self-closing serrated points. Nickel-plated steel. 6½."
Carded: No. 7337

D. **SCREWDRIVER WITH INTERCHANGEABLE BLADES**
Aluminum handle and chuck and 5 steel screwdriver blades sizes .040" through .100." Notched shank for greater torque. Storage base.
Carded: No. 7070

E. **PIN VISE SET**
Includes double-ended pin vise, pin vise bit guard and 3 assorted drill bits. Carded: No. 7144

F. **PARTPICKER**
For small hard-to-handle pieces. Smooth one-handed action.
Carded: No. 7380

G. **No. 13 BLADE**
Precision saw cutting. 5 blades. Carded: No. 213

H. **No. 10 BLADE**
For fine general cutting, carving, correcting stencils.
Safety dispenser of 10 blades. Carded: No. 410

I. **No. 22 BLADE**
General shaping, whittling, trimming, removing excess flashing.
Safety dispenser of 10 blades. Carded: No. 422

J. **No. 11 BLADE**
Extremely sharp point for fine angle cutting and stripping.
Safety dispenser of 10 blades. Carded: No. 411

K. **No. 1 KNIFE**
Aluminum handle 4⅞" long with No. 11 blade. Carded: No. 3201

L. **No. 2 KNIFE**
Aluminum handle 5" long with No. 22 blade. Carded: No. 3202

M. **No. 6 KNIFE**
Aluminum handle 4¾" long with No. 24 blade. Carded: No. 3206

N. **No. 5 KNIFE**
Plastic handle with metal blade lock, 4¼" long with No. 19 blade.
Carded: No. 3205

O. **MINIATURE NEEDLE RASPS**
6 assorted rasps. For rough shaping of wood or plastic.
4¾" long. Vinyl storage pouch. No. 7366

P. **MITRE BOX**
Aluminum ¾" x 1¾" capacity. 6" long. With two 45° and one 90° cutting slots. Carded: No. 7533

Q. **EXTRA-FINE RAZOR SAW**
1¼" deep with cutting edge 5½" long and 54 teeth per inch for extra fine precision. For use with No. 7533 mitre box. Carded: No. 7535

R. **POWER SPRAYER**
Push-button action sprays evenly. Includes a one ounce jar and propellant to spray on intricate or flat surfaces up to 16 ounces of liquid materials. Carded: No. 43561

MINIATURIST'S TOOL SET
Basic tools for assembling miniatures, models and working with small parts. 4 clamps, tweezer, pin vise with 3 bits, 2 sanders, screwdriver and No. 1 Knife in fitted tray.
No. 43910

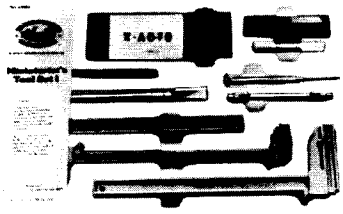

DELUXE MINIATURIST'S TOOL CHEST
Fitted wooden chest contains precision tools for assembling miniatures, models and working with small parts: razor saw blade, mitre box, 4 clamps, pin vise and 3 bits, Nos. 1 and 5 Knives, sanders and screwdriver.
Boxed: No. 43911